ONYX

TECHNOLOGY POWERING A CLEANER FUTURE

LX1000

999cc PROPANE ENGINE ILLUSTRATED PARTS LIST

(Appearance May Vary)

Parts & Service:

Online: www.OnyxSolutions.com
Email: sales@onyxsolutions.com
Call: 704-827-9368

W11339_Rev C
20221028 SJA

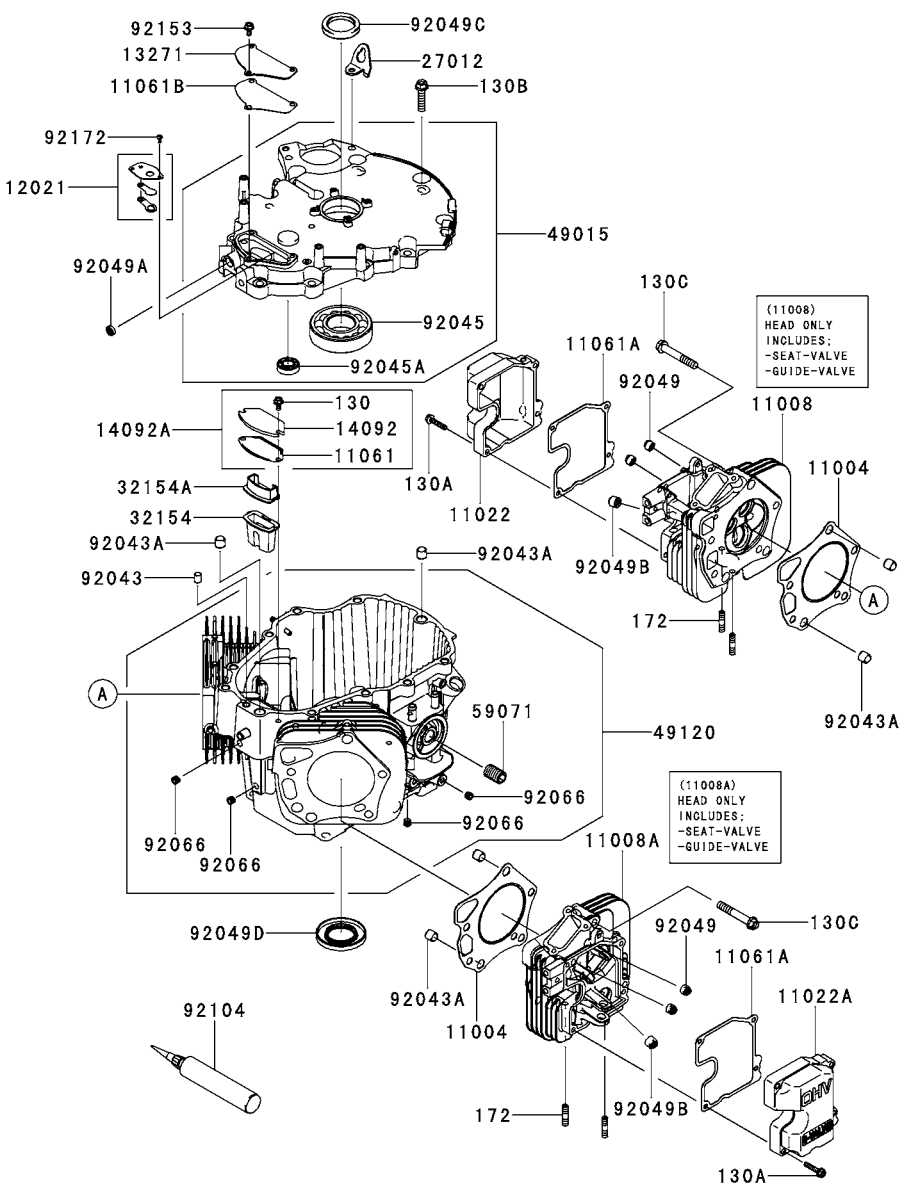

CYLINDER/CRANKCASE

Ref.	Part No.	Description	Quantity
11004	11004-7023	GASKET-HEAD	2
11008	11008-1440	HEAD-COMP-CYLINDER,#1	1
11008A	11008-1441	HEAD-COMP-CYLINDER,#2	1
11022	11022-0730	CASE-ROCKER,#1	1
11022A	11022-0731	CASE-ROCKER,#2	1
11061	11061-0816	GASKET,BREATHER	1
11061A	11061-7055	GASKET,CASE-ROCKER	2
11061B	11061-7065	GASKET,BREATHER-COVER	1
12021	12021-7003	VALVE-ASSY-REED,BREATHER	1
13271	13271-7037	PLATE,BREATHER-COVER	1
14092	14092-1036	COVER,BREATHER	1
14092A	14092-6002	COVER	1
27012	27012-7008	HOOK	1
32154	32154-7014	PIPE,BREATHER	1
32154A	32154-7015	PIPE,BREATHER	1
49015	49015-7093	COVER-CRANKCASE	1
49120	49120-0844	CRANKCASE-COMP	1
59071	59071-0733	JOINT	1
92043	92043-0858	PIN	1
92043A	92043-1266	PIN,11X14X12.3	6
92045	92045-0712	BEARING-BALL,6308	1
92045A	92045-7002	BEARING-BALL,A 15X32X9 6002	1
92049	92049-7001	SEAL-OIL,RVC2 6X11X10.2	4
92049A	92049-7019	SEAL-OIL,SO 8X14X5 HS	1
92049B	92049-7020	SEAL-OIL,7X15X13	2
92049C	92049-7024	SEAL-OIL,SD 40X54X9 R HS	1
92049D	92049-7025	SEAL-OIL,SD 40X72X8 L VS	1
92066	92066-0762	PLUG	4
92104	92104-0007	GASKET-LIQUID,TB1217H	AR
92153	92153-7043	BOLT,6X12	3
92172	92172-0870	SCREW,4X8	2
130	130AA0616	BOLT-FLANGED,6X16	2
130A	130AA0630	BOLT-FLANGED,6X30	8
130B	130CA1040	BOLT-FLANGED,10X40	11
130C	130CA1065	BOLT-FLANGED,10X65	10
172	172BA0822	BOLT-STUD,8X22	4

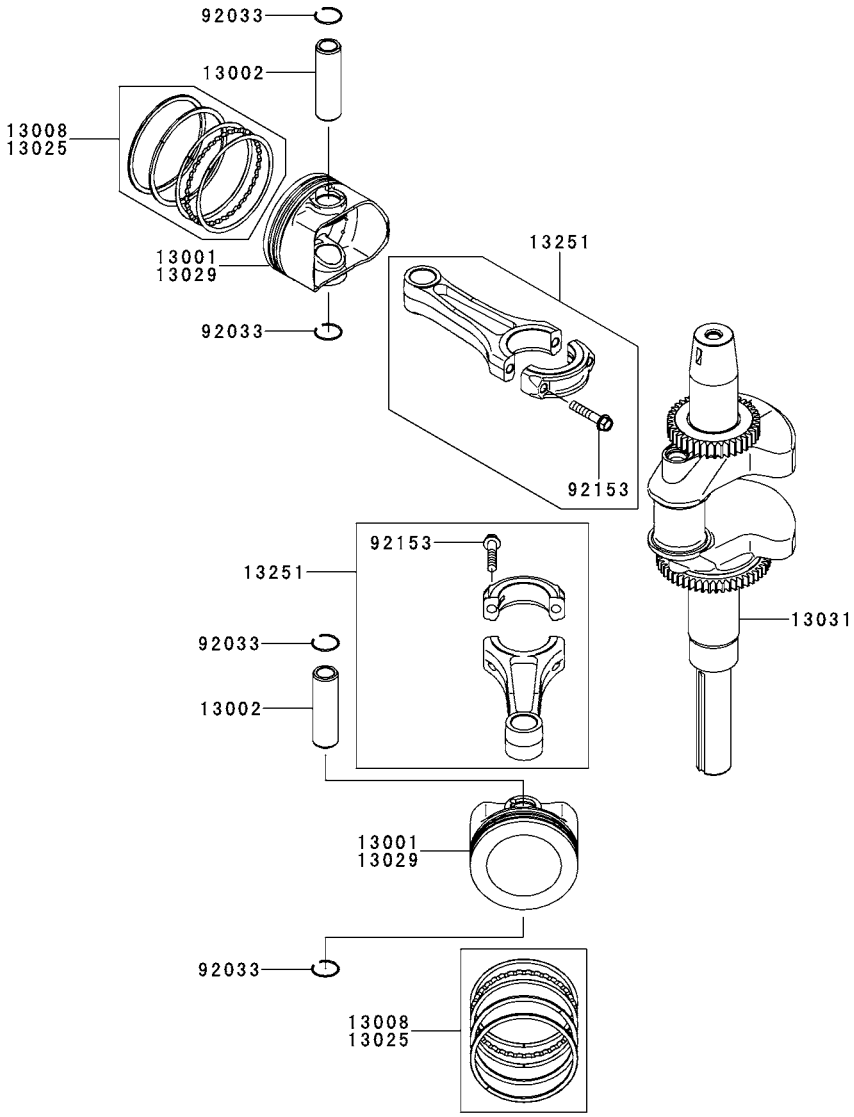

PISTON/CRANKSHAFT

Ref.	Part No.	Description	Quantity
13001	13001-7032	PISTON-ENGINE	2
13002	13002-7004	PIN-PISTON	2
13008	13008-7007	RING-SET-PISTON	2
13025	13025-0014	RING-SET-PISTON L0.5	AR
13029	13029-0025	PISTON-ENGINE L0.5	AR
13031	13031-7080	CRANKSHAFT-COMP	1
13251	13251-0044	ROD-ASSY-CONNECTING	2
92033	92033-0726	RING-SNAP	4
92153	92153-2054	BOLT,7X35.2	4

VALVE/CAMSHAFT

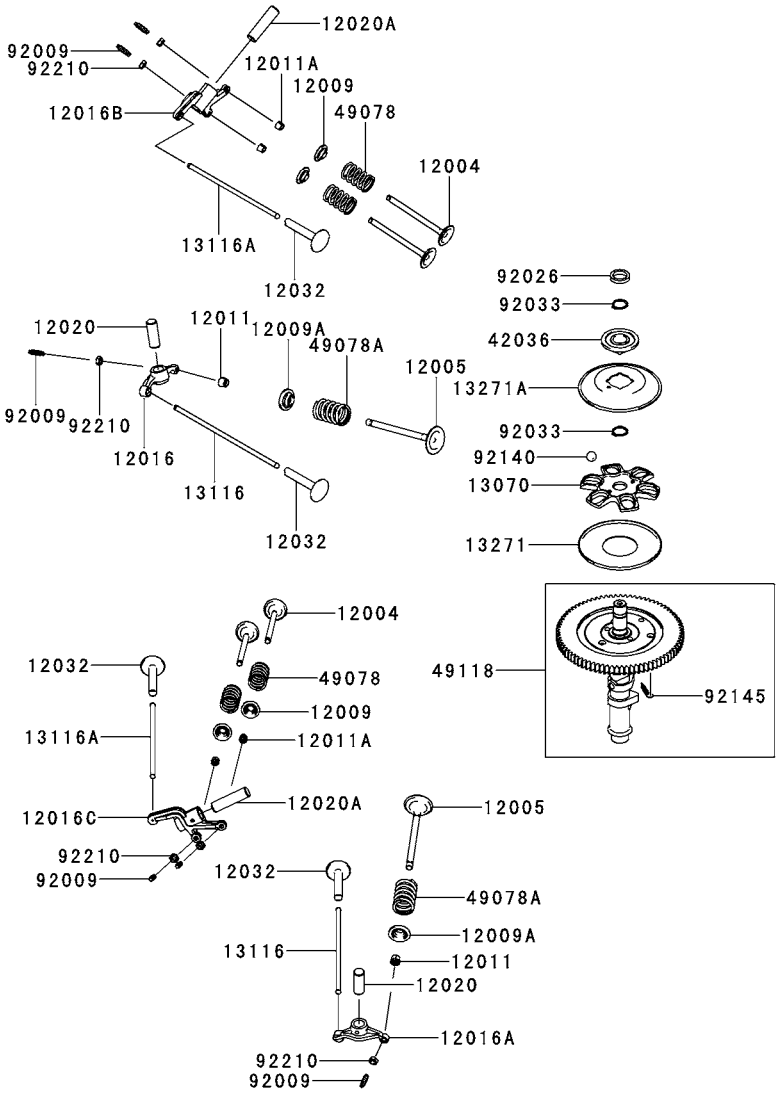

Ref.	Part No.	Description	Quantity
12004	12004-7006	VALVE-INTAKE	4
12005	12005-0714	VALVE-EXHAUST	2
12009	12009-7001	RETAINER-VALVE SPRING	4
12009A	12009-7004	RETAINER-VALVE SPRING	2
12011	12011-2052	COLLET	4
12011A	12011-2056	COLLET	8
12016	12016-0713	ARM-ROCKER,#1,EX	1
12016A	12016-0714	ARM-ROCKER,#2,EX	1
12016B	12016-7014	ARM-ROCKER,#1,IN	1
12016C	12016-7015	ARM-ROCKER,#2,IN	1
12020	12020-0707	SHAFT-ROCKER,EX	2
12020A	12020-0708	SHAFT-ROCKER,IN	2
12032	12032-7002	TAPPET	4
13070	13070-7004	GUIDE	1
13116	13116-0711	ROD-PUSH	2
13116A	13116-0712	ROD-PUSH	2
13271	13271-7007	PLATE	1
13271A	13271-7021	PLATE,GOVERNOR	1
42036	42036-7010	SLEEVE	1
49078	49078-7006	SPRING-ENGINE VALVE,IN	4
49078A	49078-7007	SPRING-ENGINE VALVE,EX	2
49118	49118-0815	CAMSHAFT-COMP	1
92009	92009-1109	SCREW,VALVE ADJUST	6
92026	92026-0760	SPACER	1
92033	92033-0727	RING-SNAP	2
92140	92140-7005	BALL	6
92145	92145-1653	SPRING	1
92210	92210-1491	NUT,VALVE ADJUST LOCK	6

LUBRICATION-EQUIPMENT

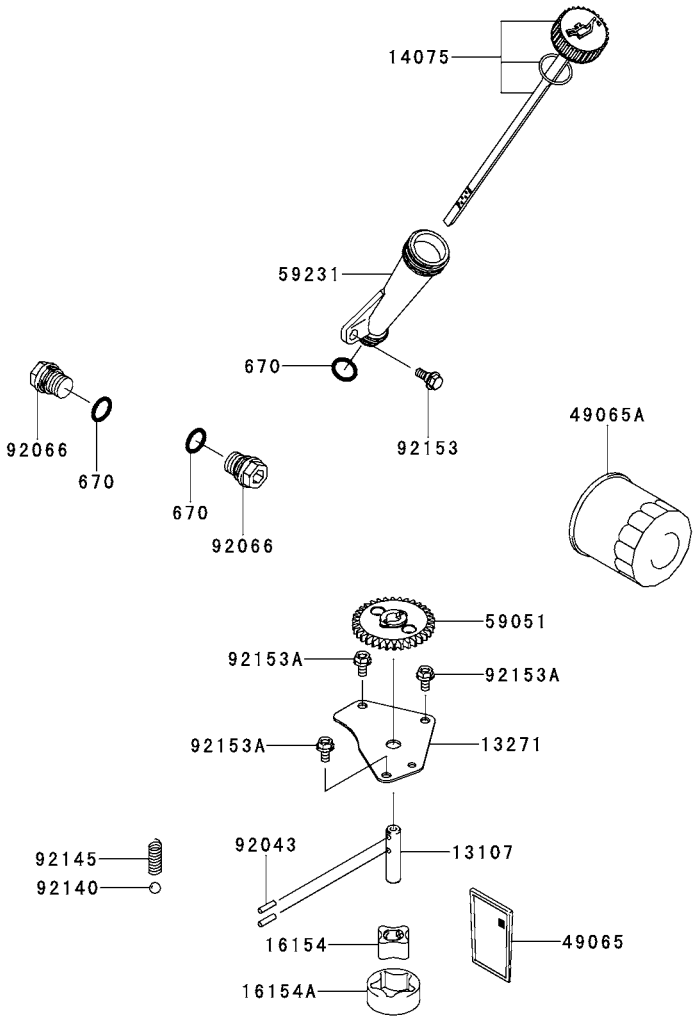

Ref.	Part No.	Description	Quantity
13107	13107-7009	SHAFT	1
13271	13271-7034	PLATE,ROTOR-PUMP	1
14075	14075-0049	CAP-ASSY/ DIPSTICK	1
16154	16154-7007	ROTOR-PUMP,IN	1
16154A	16154-7008	ROTOR-PUMP,OUT	1
49065	49065-7004	FILTER-OIL	1
49065A	49065-7010	FILTER-OIL	1
59051	59051-7026	GEAR-SPUR,OIL-PUMP	1
59231	59231-0748	FILLER	1
92043	92043-7003	PIN	2
92066	92066-0774	PLUG	2
92140	92140-7003	BALL,STEEL,13/32	1
92145	92145-7046	SPRING	1
92153	92153-7007	BOLT,FLANGED,6X16	1
92153A	92153-7043	BOLT,6X12	3
670	670D2016	O RING,16MM	3

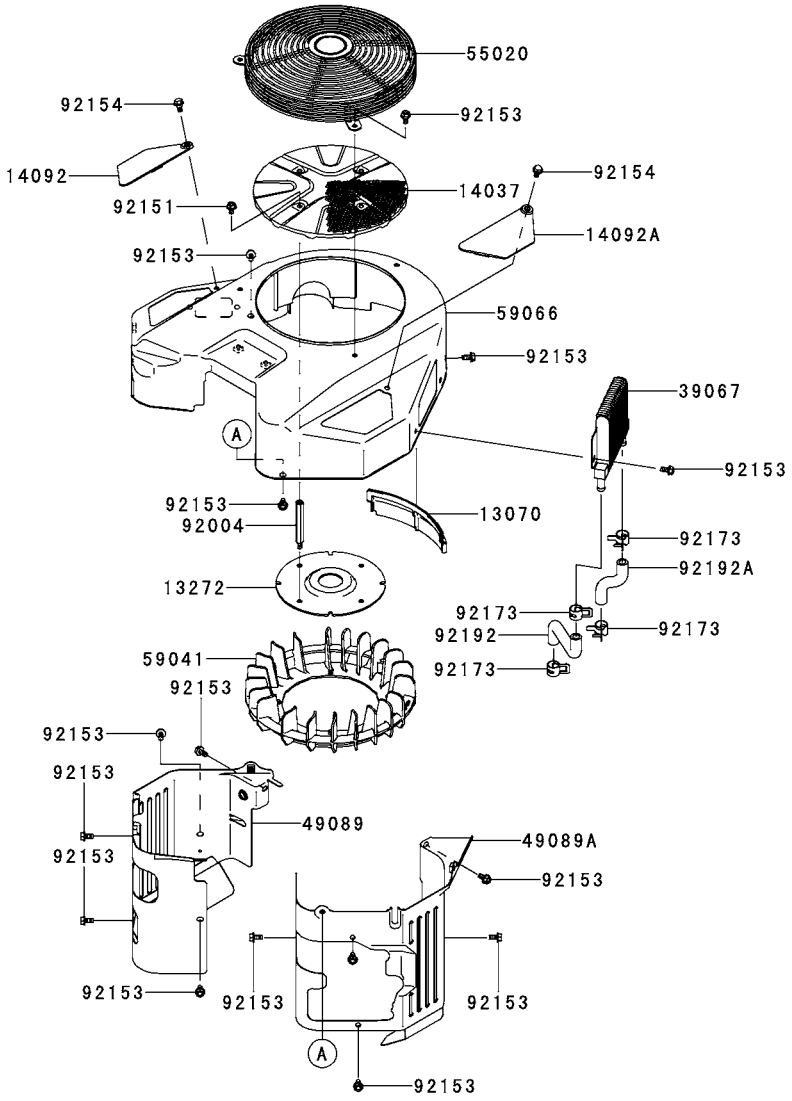

COOLING-EQUIPMENT

Ref.	Part No.	Description	Quantity
13070	13070-7013	GUIDE	1
13272	13272-1485	PLATE,FAN	1
14037	14037-0804	SCREEN	1
14092	14092-1039	COVER	1
14092A	14092-1040	COVER	1
39067	39067-7007	COOLER-OIL	1
49089	49089-0872	SHROUD-ENGINE,#1	1
49089A	49089-7088-753	SHROUD-ENGINE	1
55020	55020-2353	GUARD	1
59041	59041-7019	FAN	1
59066	59066-0807-753	HOUSING-FAN,GRAY	1
92004	92004-7021	STUD,6X69	4
92151	92151-7012	BOLT,6X12	4
92153	92153-7043	BOLT,6X12	18
92154	92154-1119	BOLT	2
92173	92173-1619	CLAMP	4
92192	92192-7078	TUBE	1
92192A	92192-7079	TUBE	1

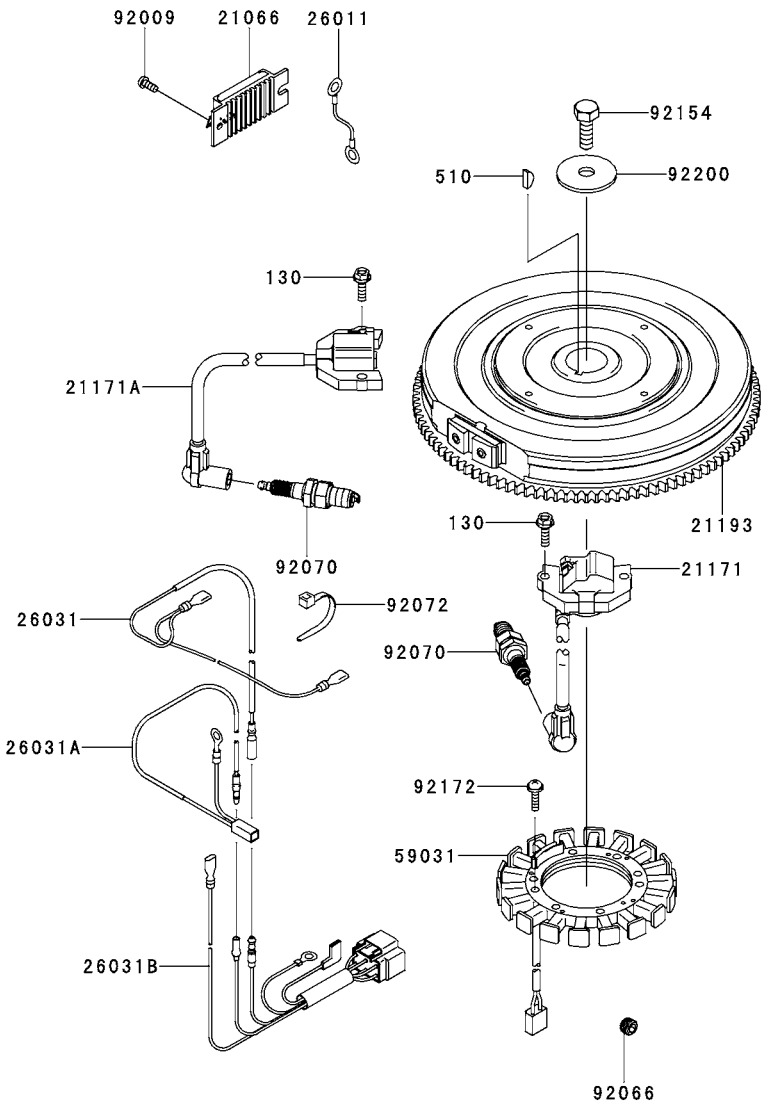

ELECTRIC-EQUIPMENT

Ref.	Part No.	Description	Quantity
21066	21066-0740	REGULATOR-VOLTAGE	1
21171	21171-0743	COIL-ASSY-IGNITION,#1 CYL	1
21171A	21171-0744	COIL-ASSY-IGNITION,#2 CYL	1
21193	21193-0018	FLYWHEEL-ASSY	1
26011	26011-2234	WIRE-LEAD	1
26031	26031-7033	HARNESS	1
26031A	26031-7034	HARNESS	1
26031B	26031-7039	HARNESS	1
59031	59031-7017	COIL-CHARGING	1
92009	92009-2308	SCREW	2
92066	92066-0762	PLUG	1
92070	KBPR5ES	PLUG-SPARK,BPR5ES(NGK),SOLID	2
92072	92072-7003	BAND	3
92154	92154-7003	BOLT,12X30	1
92172	92172-7018	SCREW,5X20	4
92200	92200-7040	WASHER,12.2X46X3	1
130	130AA0620	BOLT-FLANGED,6X20	4
510	510A5100	KEY-WOODRUFF	1

CONTROL-EQUIPMENT

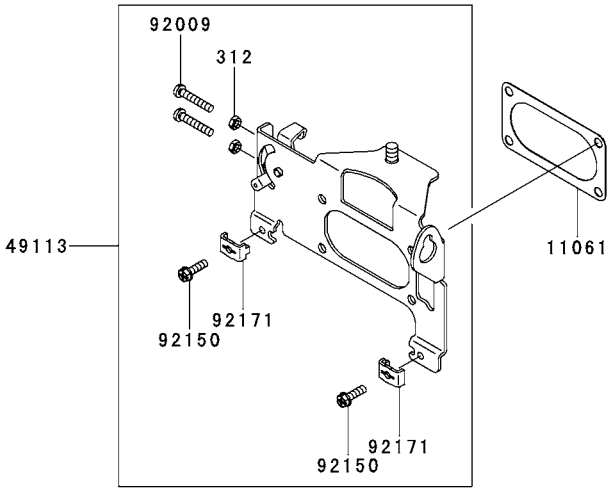

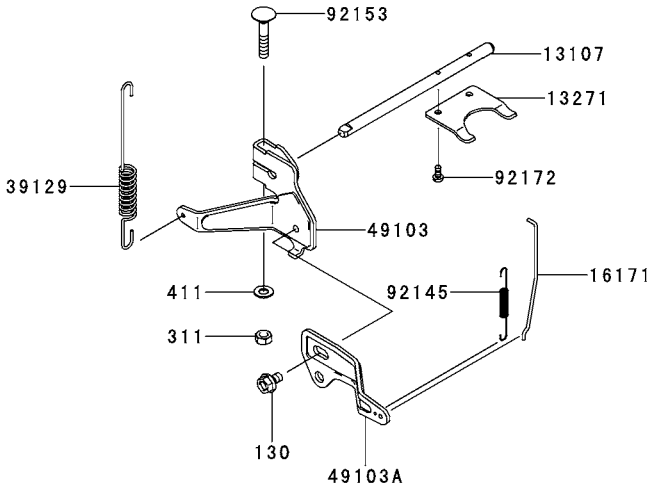

Ref.	Part No.	Description	Quantity
11061	11061-7056	GASKET,PIPE-INTAKE	1
13107	13107-7040	SHAFT	1
13271	13271-7038	PLATE	1
16171	16171-0038	LINK	1
39129	39129-7027	SPRING-GOVERNOR	1
49103	49103-7009	ARM-GOVERNOR	1
49103A	49103-7010	ARM-GOVERNOR	1
49113	49113-0008	PANEL-COMP-CONTROL	1
92009	92009-2381	SCREW,5X30	2
92145	92145-7050	SPRING	1
92150	92150-2182	BOLT,5X18	2
92153	92153-7033	BOLT,6X35	1
92171	92171-7018	CLAMP	2
92172	92172-0870	SCREW,4X8	2
130	130BA0610	BOLT-FLANGED,6X10	1
311	311AA0600	NUT-HEX,6MM	1
312	312AA0500	NUT-HEX,5MM	2
411	411AA0600	WASHER-PLAIN,6MM	1

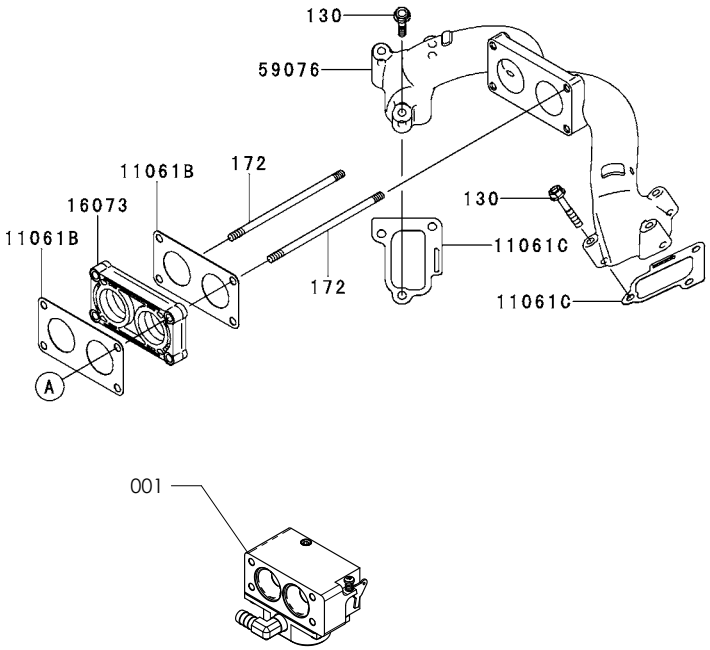

CARBURETOR

Ref.	Part No.	Description	Quantity
11061B	11061-7057	GASKET,INSULATOR	2
11061C	11061-7062	GASKET,MANIFOLD	2
16073	16073-7010	INSULATOR	1
59076	59076-7012	MANIFOLD-INTAKE	1
130	130AA0635	BOLT-FLANGED,6X35	6
172	172BA06120	BOLT-STUD,6X120	2
001	W11340	Carburetor Assembly - LX1000	1

AIR-FILTER/MUFFLER

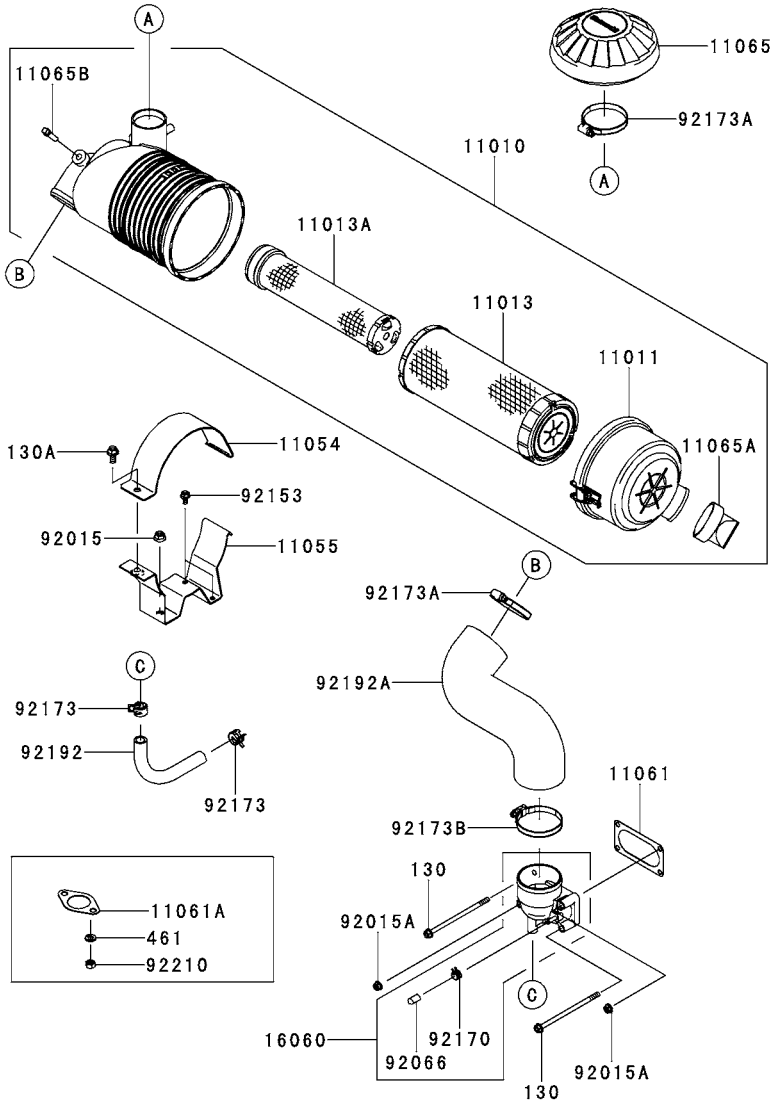

Ref.	Part No.	Description	Quantity
11010	11010-7028	FILTER-ASSY-AIR	1
11011	11011-7056	CASE-AIR FILTER	1
11013	11013-7044	ELEMENT-AIR FILTER	1
11013A	11013-7045	ELEMENT-AIR FILTER	1
11054	11057-4280	BRACKET	1
11055	11055-7010-9H	BRACKET	1
11061	11061-7056	GASKET,PIPE-INTAKE	1
11061A	11061-7061	GASKET,MUFFLER	2
11065	11065-1384	CAP, RAIN HOOD	1
11065A	11065-7034	CAP	1
11065B	11065-7032	CAP	1
16060	16060-0769	PIPE-INTAKE	1
92015	92015-1143	NUT,8MM	1
92015A	92015-1367	NUT,FLANGED,6MM	2
92066	92066-0095	PLUG	1
92153	92153-7043	BOLT,6X12	2
92170	92170-2042	CLAMP	1
92173	92173-7003	CLAMP	2
92173A	92173-7010	CLAMP	2
92173B	92173-7011	CLAMP	1
92192	92192-7086	TUBE,12.6X18.6X124.6	1
92192A	92192-1928	TUBE,AIR-FILTER	1
92210	92210-7027	NUT,M8	4
130	130AA06120	BOLT-FLANGED,6X120	2
130A	130BA0816	BOLT-FLANGED,8X16	1
461	461DA0800	WASHER-SPRING,8MM	4

This fig. covers: LX1000 Engines produced before December 2022

PROPANE REGULATOR (LX1000 MODELS)

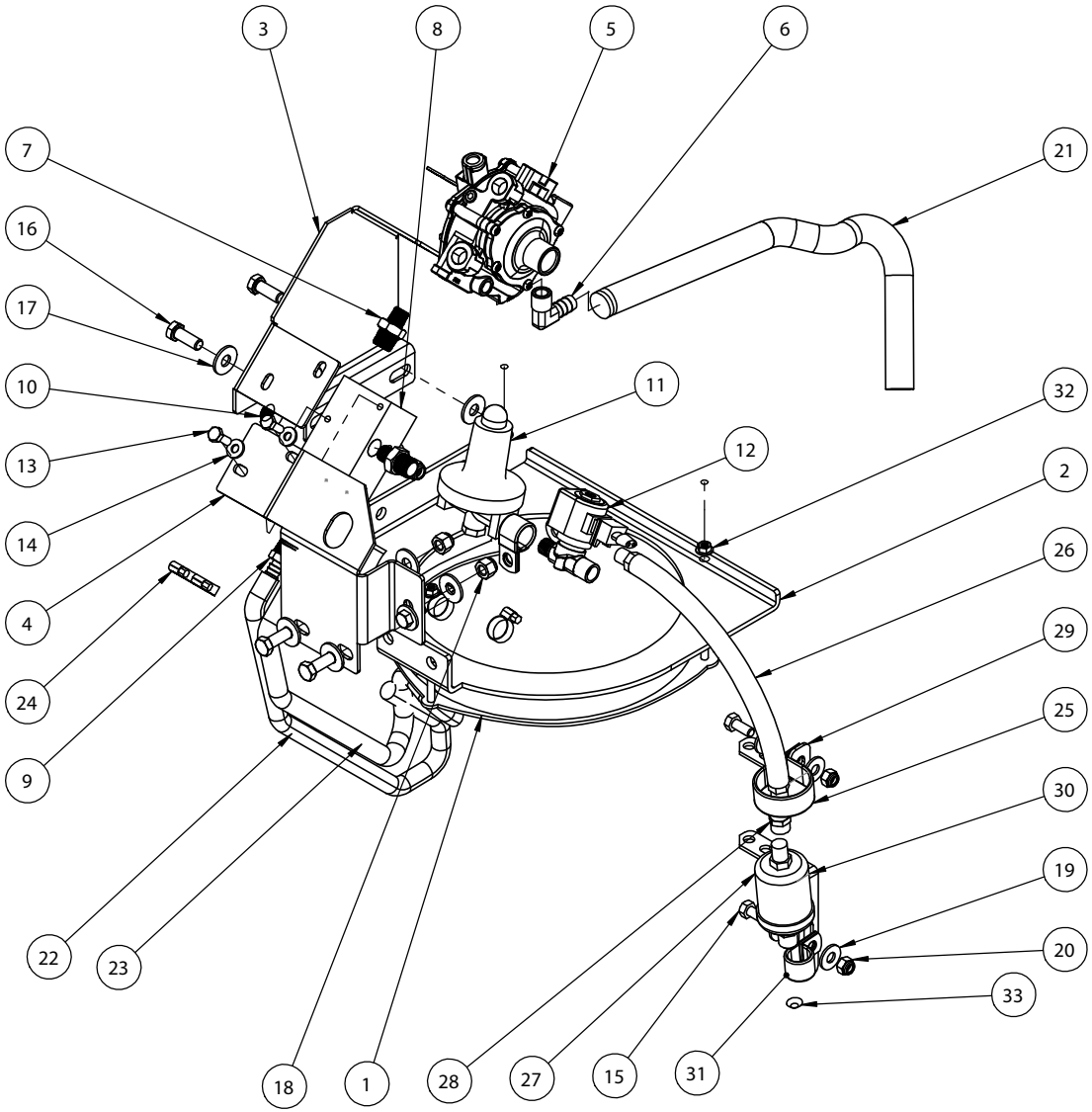

ITEM NO.	PART NUMBER	DESCRIPTION
1	W12326	Under Mount Support Plate
2	W11270	Ring Plate Mount
3	W11271	Regulator Mount
4	W11272	Filter Mount Bracket
5	W10775	T-60 REGULATOR G-SE-T60
6	F69947	3/8" MPT x 90 DEG. x 1/2" BARB
7	F421456	Hex Nipple - 1/4 MNPT x 3/8 MNPT
8	W11335	Heat Exchanger, Oil-Propane Evaporator
9	F69929	3/8 NPT Male x 3/8 Barb
10	F24134	3/8 NPT Socket Plug, Steel
11	W10769	LPG Regulator - 30 PSI Fixed Pressure
12	W10752	Propane Solenoid Shutoff Valve "Lockoff", 12V, brass, 1/4 NPT
13	F13003	Hex Cap Screw 1/4-20 x 3/4 Grade 5 Zinc
14	F33078	Flat Washer - 1/4 I.D. SAE Zinc
15	F13053	Hex Cap Screw 5/16-18 x 3/4 Grade 5 Zinc
16	F13105	Hex Cap Screw 3/8-16 x 1 Grade 5 Zinc
17	F33008	Flat Washer - 3/8 I.D. USS Zinc
18	F37024	Nut - 3/8-16 Nylock NE Zinc
19	F33006	Flat Washer - 5/16 I.D. USS Zinc
20	F37021	Nut - 5/16-18 Nylock NE Zinc
21	PT-W2660	1/2 in. LP 350 PSI HOSE
22	PT-10357	Oil Hose - 3/8 ID
23	PT-10357	Oil Hose - 3/8 ID
24	F62002	#4 5/8 - 1/4 X 5/16 MicroClamp
25	F0708821	P-Clamp - 1-3/4"
26	W2648-10.5	3/8 x 10.5" LP350 PSI Hose
27	W10782	LPG Automotive Filter - 3/8 Male Flare x 1/4 MNPT
28	F69836	High-Pressure Brass Pipe Fitting
29	W11374	Upper Fuel Filter Mounting Bracket
30	W11373	Lower Fuel Filter Mounting Bracket
31	F0447089	Vibration-Damping Loop Clamp
32	93033A101	18-8 Stainless Steel Flange Nut
33	W11390	Flare Gasket, 3/8, Copper

This fig. covers: LX1000 Engines produced After December 2022

PROPANE REGULATOR (LX1000 MODELS)

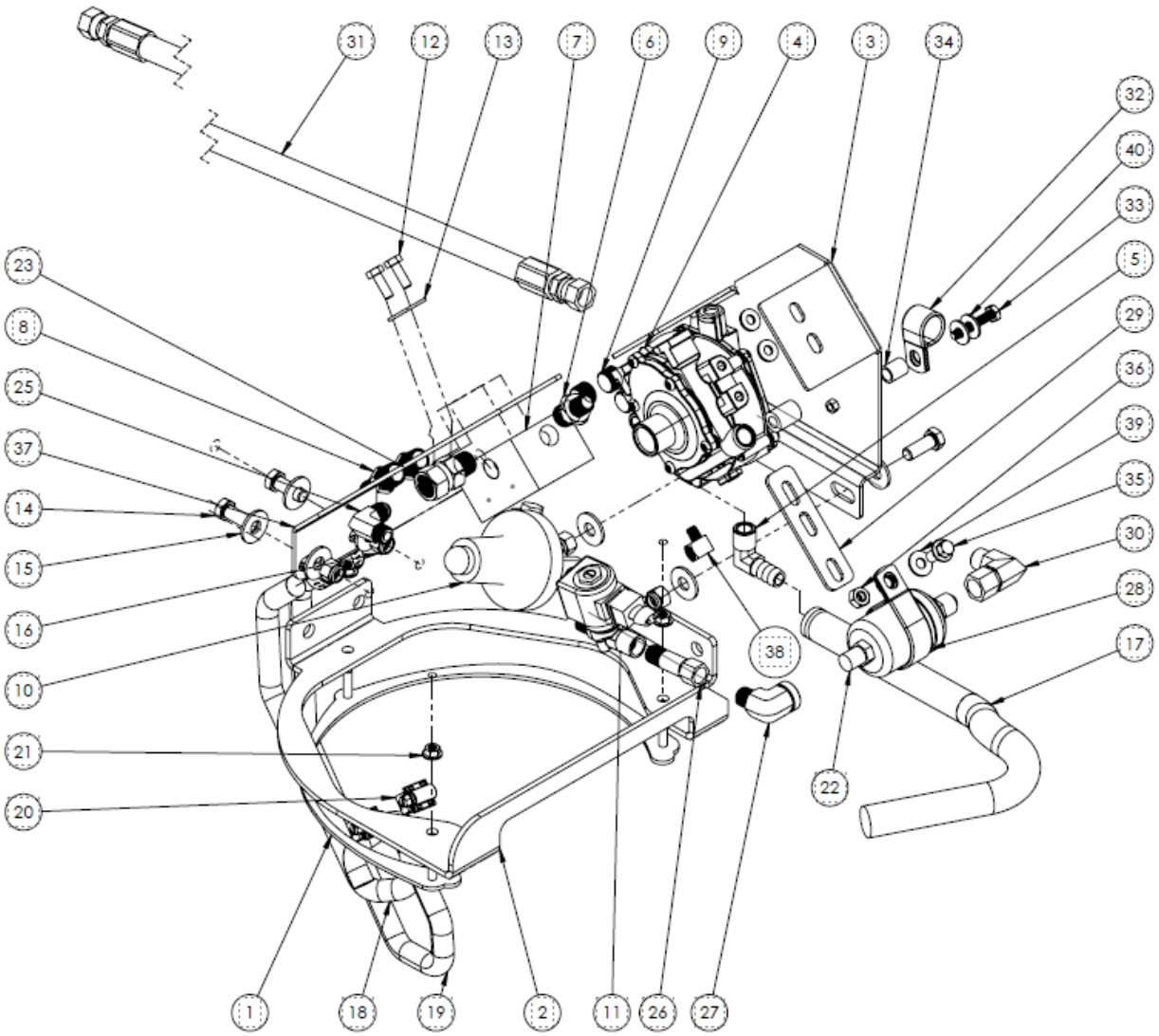

ITEM NO.	PART NUMBER	DESCRIPTION
1	W12326	Under Mount Support Plate
2	W11270	Ring Plate Mount
3	W11271	Regulator Mount
4	W10775	T-60 REGULATOR G-SE-T60
5	F69947	3/8" MPT x 90 DEG. x 1/2" BARB
6	F421456	Hex Nipple - 1/4 MNPT x 3/8 MNPT
7	W11335	Heat Exchanger, Oil-Propane Evaporator
8	F69929	3/8 NPT Male x 3/8 Barb
9	F24134	3/8 NPT Socket Plug, Steel
10	W10769	LPG Regulator - 30 PSI Fixed Pressure
11	W10752	Propane Solenoid "Lockoff", 1/4 NPT
12	F13003	Hex Cap Screw 1/4-20 x 3/4 Grade
13	F33078	Flat Washer - 1/4 I.D. SAE Zinc
14	F13105	Hex Cap Screw 3/8-16 x 1 Grade 5
15	F33008	Flat Washer - 3/8 I.D. USS Zinc
16	F37024	Nut - 3/8-16 Nyloc k NE Zinc
17	PT-W2660	1/2 in. LP 350 PSI HOSE
18	PT-10357	Oil Hose - 3/8 ID
19	PT-10357	Oil Hose - 3/8 ID
20	F62008	Worm Drive #6 5/8 - 7/8 X 9/16 Clamp
21	F11509492	M6 Stainless Steel Flange Nut
22	W10782	LPG Filter - 3/8 Male x Flare 1/4 MNPT
23	W13132	3/8" JIC Female Swivel x 3/8" Male
24	K55020-2353	Plastic Kawasaki Fan Guard
25	W13133	3/8" JIC Male x Male Swivel
26	W13131	High-Pressure Brass Pipe Extension
27	F69881	90° Elbow - 1/4 MNPT x 1/4 FNPT Brass
28	F0708821	P-Clamp - 1-3/4"
29	W12453	Filter Extension Bracket
30	F420581-131280	90° Elbow, 3/8 SAE 45° Flare
31	W2670-48	48" of 3/8" LP350 PSI Hose
32	F0447089	Vibration-Damping Loop Clamp
33	F1113801	Hex Cap Screw 1/4-20 x 1 1/2 Grade 5
34	W11332	Bushing 3/8" ID x 5/8 Length
35	F0161821	Hex Washer Bolt, M8-1.25 x 16mm
36	F0154963	M8 x 1.25 Nyloc Hex Nut
37	W12452	Top Support Bracket
38	F440084-131280	High- Pressure Brass Pipe Fitting
39	F33006	Flat Washer - 5/16 I.D. USS Zinc
40	F33004	USS Flat Washer 1/4 I.D.

STARTER

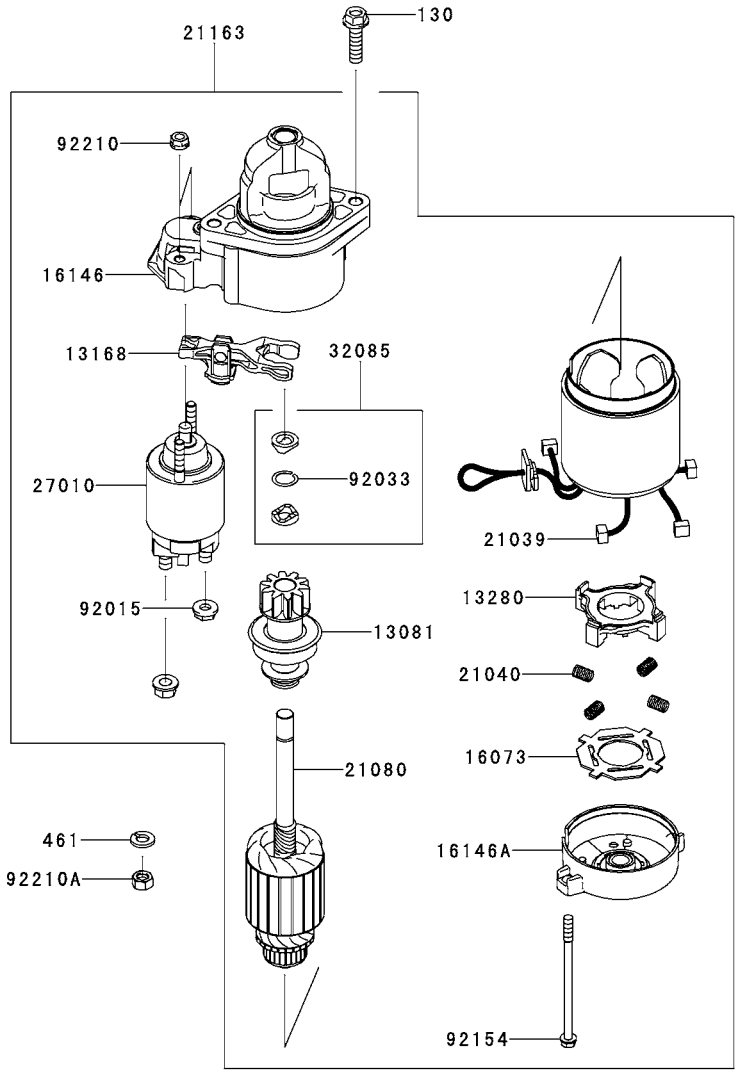

Ref.	Part No.	Description	Quantity
13081	13081-0651	CLUTCH-ASSY,STARTER-ELECTRIC	1
13168	13168-0847	LEVER,PINION DRIVE	1
13280	13280-0873	HOLDER,BRUSH	1
16073	16073-0854	INSULATOR	1
16146	16146-0795	COVER-ASSY,STARTER DRIVE	1
16146A	16146-0796	COVER-ASSY,COMMUTATOR END	1
21039	21039-0011	BRUSH,STARTER-ELECTRIC	4
21040	21040-0005	SPRING-BRUSH	4
21080	21080-0011	ARMATURE,STARTER-ELECTRIC	1
21163	99996-6121	STARTER-ELECTRIC	1
27010	27010-0843	SWITCH,MAGNET	1
32085	32085-0797	STOPPER,PINION	1
92015	92015-2147	NUT	1
92033	92033-0777	RING-SNAP	1
92154	92154-2116	BOLT	2
92210	92210-1493	NUT	2
92210A	92210-7027	NUT,M8	1
130	130BA0830	BOLT-FLANGED,8X30	2
461	461DA0800	WASHER-SPRING,8MM	1

SUPPLEMENTAL COMPONENTS

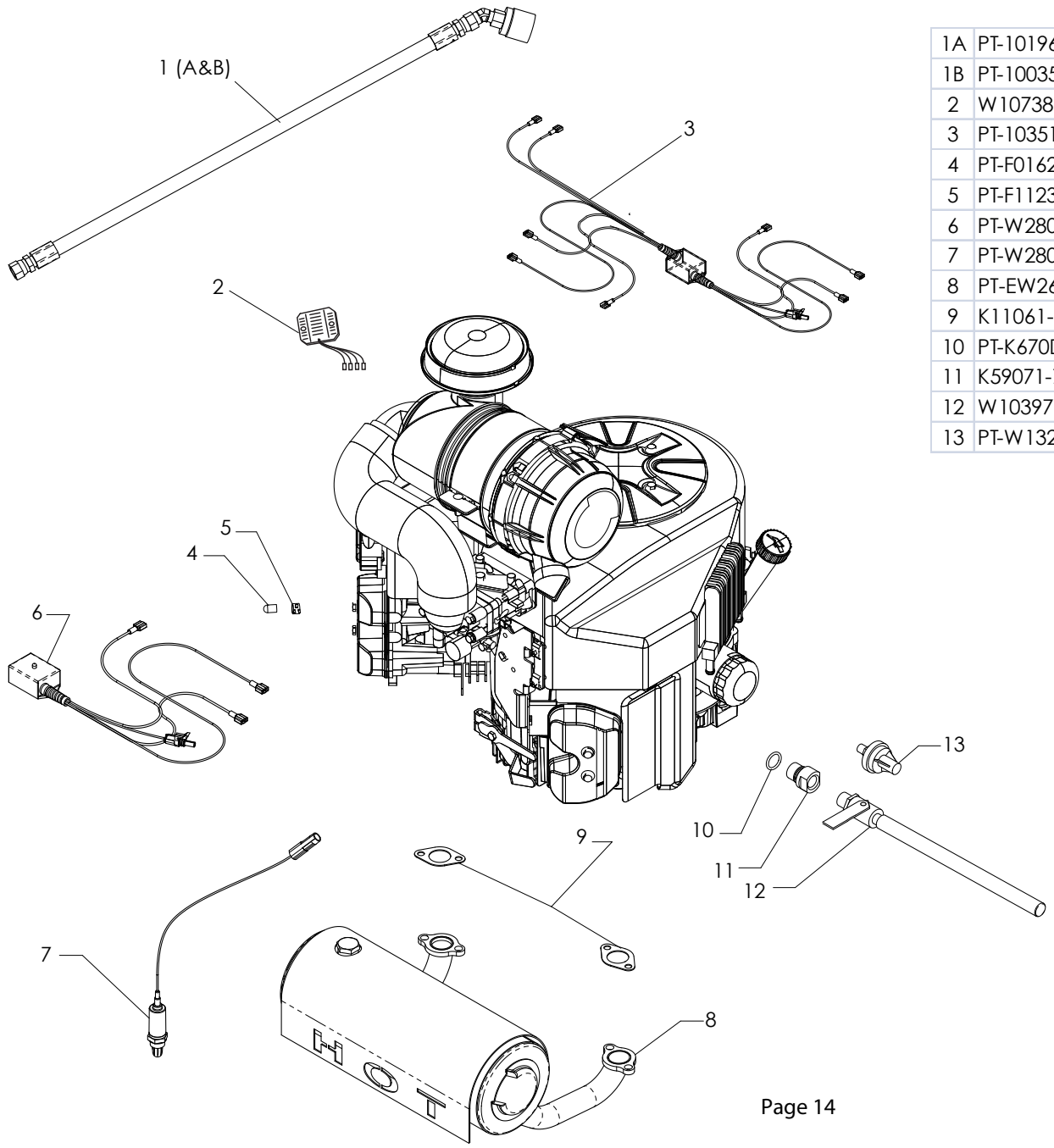

1A	PT-10196	ASM - 60 in. High Pres. Hose ASM RH
1B	PT-10035	ASM - High Pres. LP Hose ASM - 48 in., RH Thread
2	W10738	Voltage Regulator - AC to 12VDC, 22 Amp
3	PT-10351	Wiring Harness - Universal Hot Start w/ DPDT Relay
4	PT-F0162591	Vacuum Cap - Rubber, 1/4 in. ID x 9/16 in L.
5	PT-F11235001	SPRING Clamp - 7/16 in.
6	PT-W2804	Emissions Module
7	PT-W2803	O2 Sensor, Exhaust, Narrow Band
8	PT-EW2625	Muffler W/Cat. For 999cc
9	K11061-7061	Exhaust Gasket - FX1000V
10	PT-K670D2016	O RING,16MM
11	K59071-7023	JOINT, OIL DRAIN
12	W10397	Oil Drain ASM, 3/8 NPT
13	PT-W1325	Oil Pressure Switch, SPST, N.O., 1/8 BSP